Ensto One Home



ENG Installation Manual

CE

RAK131_ENG
15.3.2021
© 2020 Ensto

Contents

1. Safety instructions....3
2. Delivery contents....3
3. Mounting instructions....4
    3.1. Before installation....4
    3.2. Cable entries....5
    3.3. Wall mounting....7
4. Power supply....9
5. Technical information....13
6. Code key....15
7. Installation / Commissioning checklist....16
8. EVH161-HC000 / EVH321-HC000 internal circuit example....17
9. EVH163-HC000 / EVH323-HC000 internal circuit example....18
10. EVH161-HCR00 / EVH321-HCR00 internal circuit example....19
11. EVH163-HCR00 / EVH323-HCR00 internal circuit example....20
12. Dimension drawing....21
13. Troubleshooting....21
14. Ensto Charger Control Application....22
    14.1. Installer menu in the Ensto Charger Control Application....22
    14.1.1. Self test....22
    14.1.2. Update device firmware....23
    14.1.3. Maximum charging current....23
    14.1.4. Connected phases....23
    14.1.5. Phase rotation (only 3-phase chargers)....23
    14.1.6. Eathing System....23
    14.1.7. Overcurrent limit....23

Installation Guide

1. Safety instructions

Electrically skilled person

- **The installation must only be done by an electrician with the appropriate qualifications.**
- **Read this Installation Manual carefully before starting the installation work.**
- **Follow the instructions in this Installation Manual, and make sure that the installation complies with national safety regulations, installation methods and restrictions.**
- **The information provided in this Installation Manual in no way exempts the installer or user from responsibility to follow all applicable safety regulations.**
- **This Installation Manual is a part of the product and must be stored in a safe location so that it is available for future installation and service.**

WARNING

Danger of electric shock! Risk of fire!

- ***Improper installation can cause personal injury and property damage.***
- ***Do not switch on the power supply before the installation work is completed.***

2. Delivery contents

- EVH Charger
- Cable gland M32/M25 (depending on the model)
- Installation Manual in English,
  other languages please see www.ensto.com.
- Multilingual User Guide



3. Mounting instructions

3.1. Before installation

Remove the charger from its package. Do not scratch the surface of the charger after removal from the package.

When selecting installation site, take into account the following:

- The charger is suitable for indoor and outdoor use.
- In order to ensure the optimal charging performance, the charger should not be exposed to direct sunlight.
- The minimum space needed for operating and maintenance.

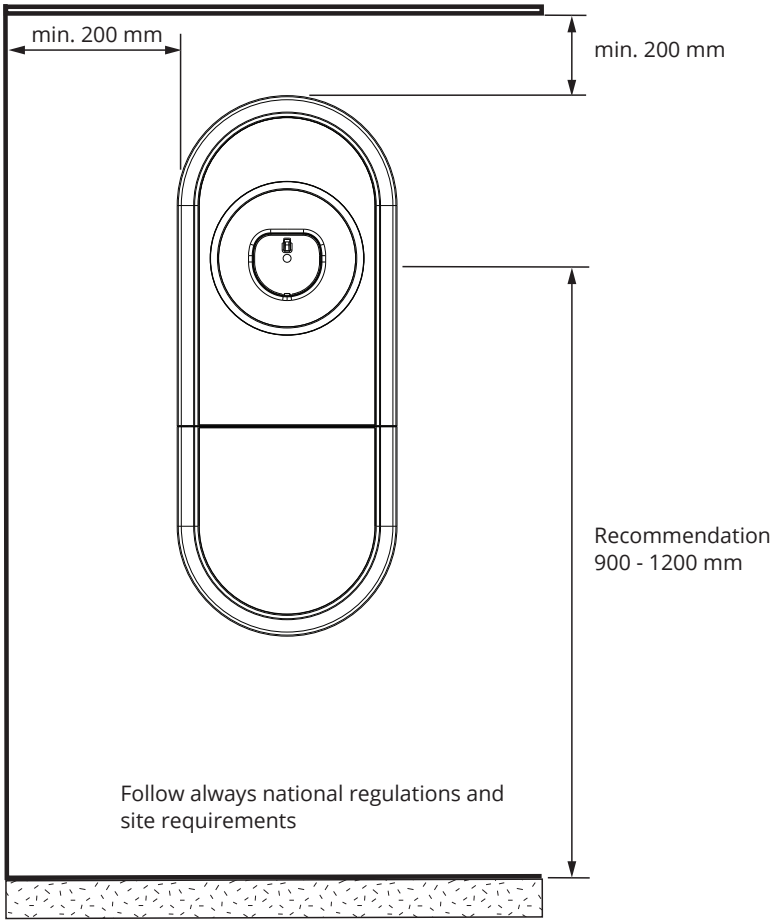

3.2. Cable entries

- Take the cable routing into consideration when planning the installation. The supply cable can be routed into the enclosure from the rear or bottom. Default cable routing is from the bottom.
- The M32 cable gland for the supply cable is pre-assembled on the bottom of the charger.
- If you need to open additional cable entries, you have to disassemble the charger.

Installation steps when cable routing is from alternative cable entries

1. Disassemble the charger.

4 Remove the screws 5pcs.
Remove the insert from the base.

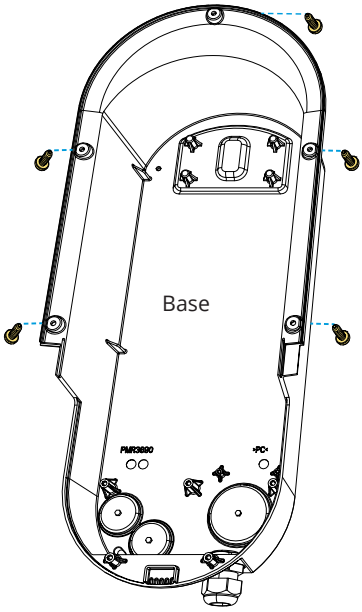

TX20

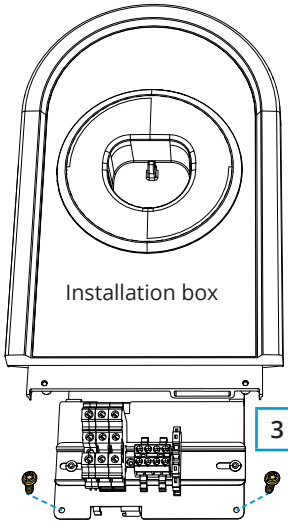

3 Remove the screws 2pcs.

2 Remove the screws 4pcs.
Remove the installation box cover.

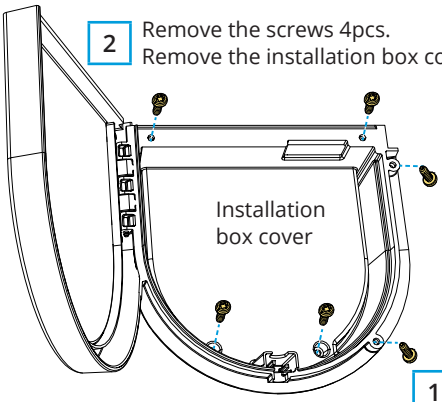

1

Screw fixing: Remove the screws 2pcs.
Mechanical lock: Unlock the hatch with a coin or suchlike.

2. Open the needed cable entries with a step drill bit.
3. Prepare the cable entries with suitable accessories.
4. Remove the included cable gland from the bottom and close the cable entry with a cover plug, PMR1217.32B (accessory).
5. Assemble the base and insert.
6. Assemble also the installation box cover, if electrical cables are installed in a separate session.

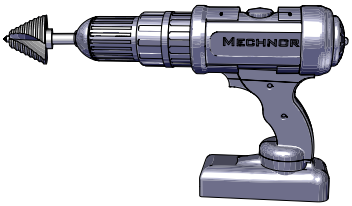

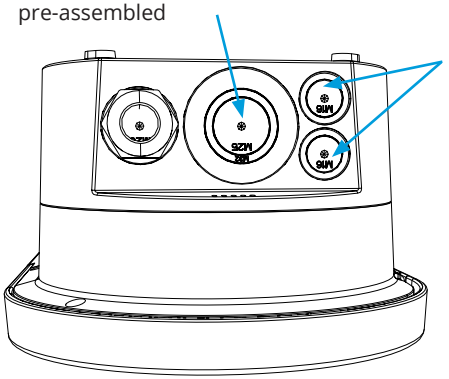

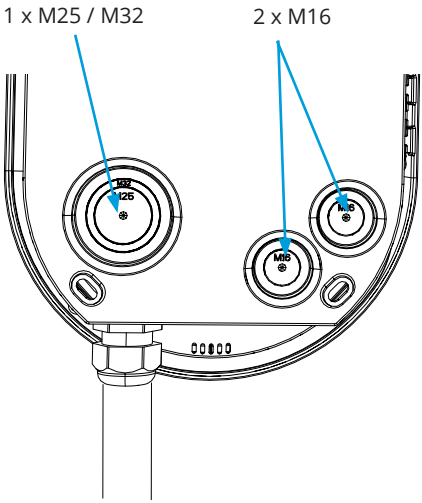

Accessories		
Part number	**Description**	**Note**
PMR1217.32B	Black cover plug for M32 opening	
KTM24.25/BLACK	M25 cable gland for cable Ø 10 - 16mm	EVH16...: included 1pc
PMR1219.3225B	Black reduction nipple, M32 => M25	EVH16...: included 1pc
RGM16B	Membrane gasket for cable Ø 5 - 9mm	
RMM25B	Membrane gasket for cable Ø 8 - 17mm	
RMM32B	Membrane gasket for cable Ø 12 - 24mm	

3.3. Wall mounting

- When selecting the installation location, make sure that the wall material is suitable and robust. The mounting surface should be flat and vertical.

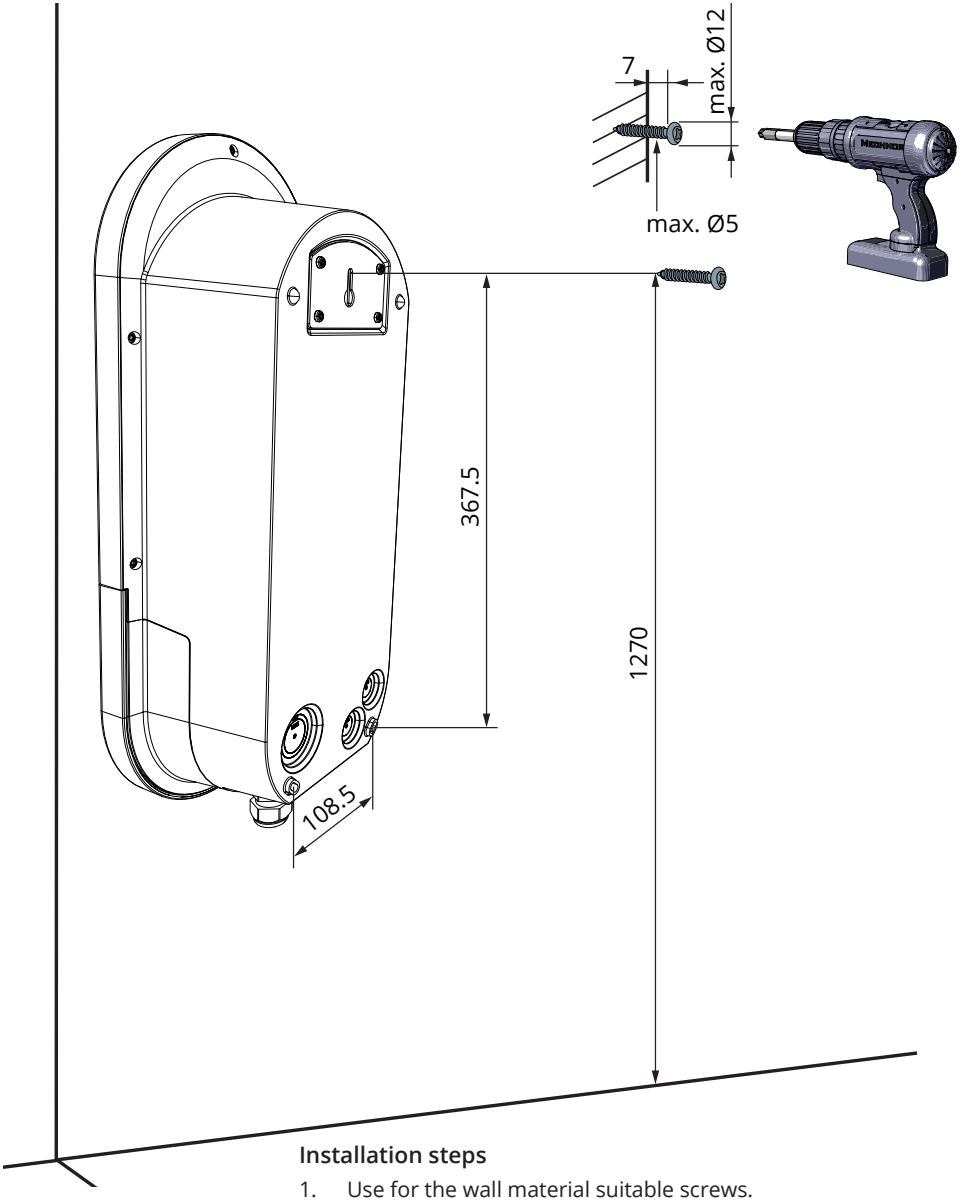

Installation steps

1. Use for the wall material suitable screws.
2. Fasten the upper screw 1270 mm measured from the ground surface. The plug holder will be at a height of 1200 mm.

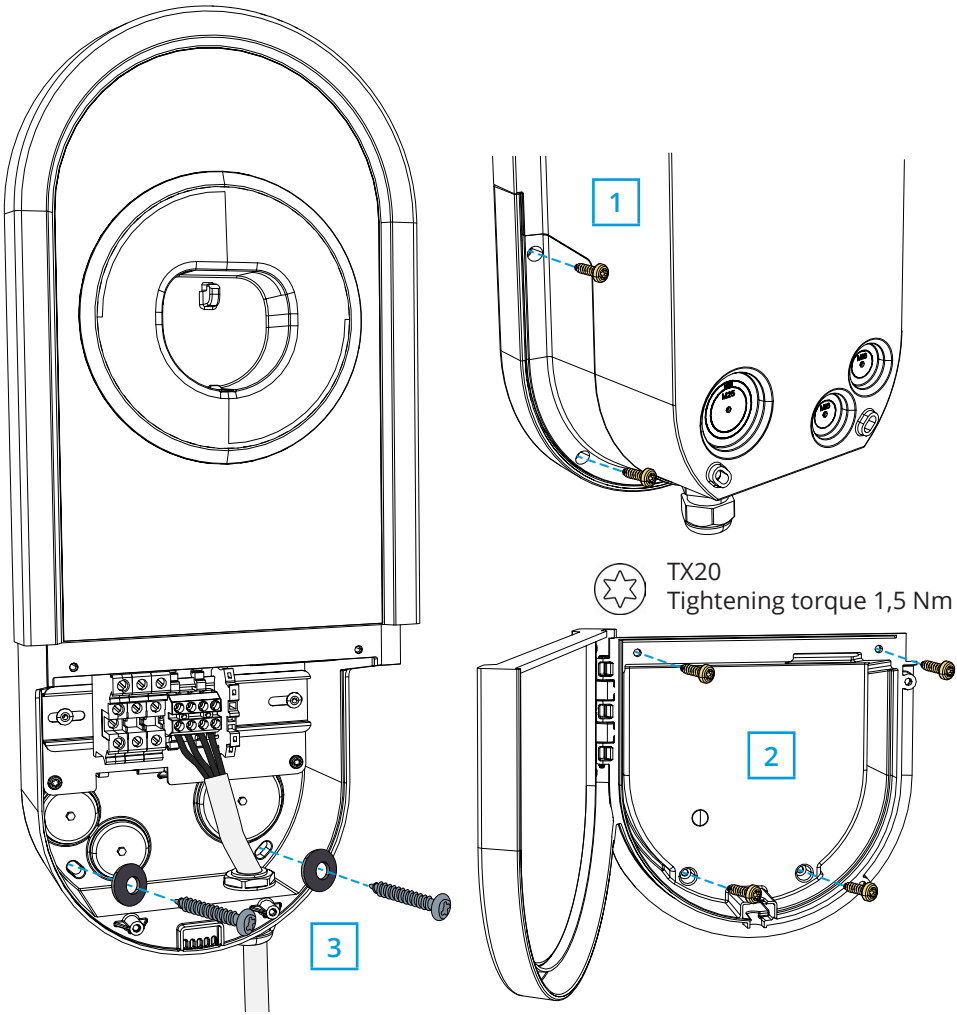

3. Open the installation box hatch by removing the fastening screws (2 pcs) / unlocking the hatch lock [1].
4. Remove the entire installation box cover by unscrewing the fastening screws (4 pcs) [2].
5. Hang the charger on the screw you attached to the wall.
6. Secure the charger on wall with two washers and fastening screws (not included) [3].
   Be careful not to damage the fixed charging cable!
7. Pull the electrical cables approx. 150mm through the cable glands.
8. Cut the supply cable leads in suitable lengths. Leave the ground lead long enough so that if a fault occurs it is the last one that comes loose.
9. Strip the leads 11 mm and connect to the supply connectors.
10. Put the installation box cover back in right position and secure with the screws you removed.
11. Close the installation box hatch.

4. Power supply

The voltage and current ratings including cable sizes must comply with national regulations. The system dimensioning must be done by a qualified electrical designer.

The default setting is TN network. If you connect the charger to an IT network, you have to change the settings for the charger accordingly.

You can change the setting with the Ensto Charger Control Application.

Please see the chapter **14. Ensto Charger Control Application** on pages 22 - 23.

It is restricted to use Ensto One within 3-phase IT network as IT network configuration could cause unbalanced overloading on supply cables that further would require specific safety margins. In case of further questions, please contact your local Ensto representative.

EVH161-HC000 / EVH321-HC000:

- Install a residual current device (RCD type A, 30mA) and a circuit breaker (MCB max. 16A or max. 32A depending on charger model) to the supply line. In addition follow local regulations for the power supply line.

TN network

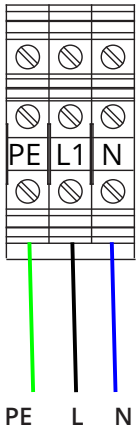

Supply
Cu 2.5 - 10 mm²

IT network

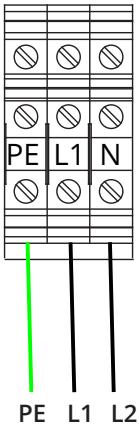

Supply
Cu 2.5 - 10 mm²

EVH163-HC000 / EVH323-HC000:

- Install a residual current device (RCD type A, 30mA) and a circuit breaker (MCB max. 16A or max. 32A depending on charger model) to the supply line. In addition follow local regulations for the power supply line.

TN network

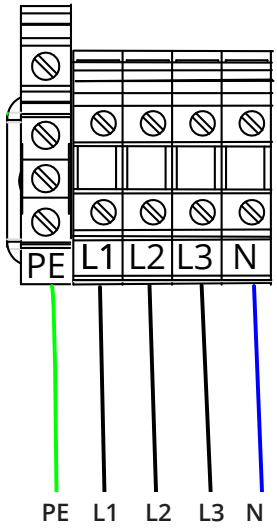

Supply
Cu 2.5 - 10 mm²

EVH161-HCR00 / EVH321-HCR00:

- A combined device with residual current circuit breaker and over current protection (RCBO) is integrated.
- A label set of RCBO testing instructions is included in the delivery. Attach a language specific label on the installation box hatch.

TN network

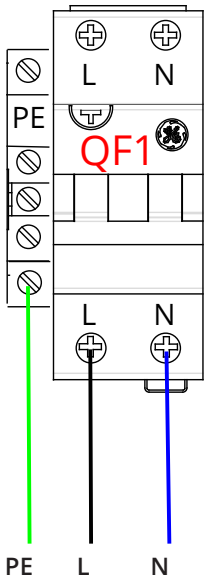

Supply
Cu 2.5 - 10 mm²

IT network

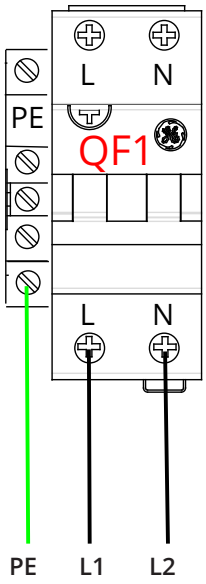

Supply
Cu 2.5 - 10 mm²

EVH163-HCR00 / EVH323-HCR00:

- A combined device with residual current circuit breaker and over current protection (RCBO) is integrated.
- A label set of RCBO testing instructions is included in the delivery. Attach a language specific label on the installation box hatch.

TN network

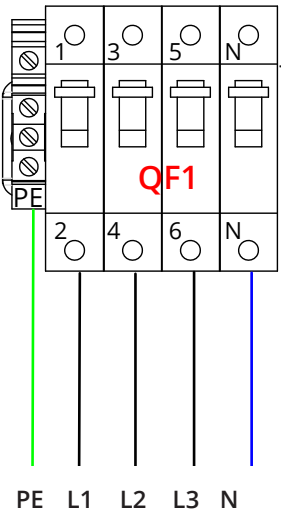

Supply
Cu 2.5 - 10 mm²

5. Technical information

Electrical Connections	EVH161-HC000	EVH321-HC000	EVH161-HCR00	EVH321-HCR00
Nominal supply voltage	1-ph, 230 VAC			
Nominal frequency	AC 50 Hz			
Charging current max.	1x16 A	1x32 A	1x16 A	1x32 A
Charging power max.	3600 W	7400 W	3600 W	7400 W
Supply connections and terminals	L1, N, PE Cu 2.5 – 10 mm² Tightening torque: 1.5 - 1.8 Nm		L1, N, PE Cu 2.5 – 10 mm² Tightening torque PE: 1.5 - 1.8 Nm L + N: 2.5 - 3.0 Nm	

Electrical Connections	EVH163-HC000	EVH323-HC000	EVH163-HCR00	EVH323-HCR00
Nominal supply voltage	3-ph, 400 VAC			
Nominal frequency	AC 50 Hz			
Charging current max.	3x16 A	3x32 A	3x16 A	3x32 A
Charging power max.	11 000 W	22 000 W	11 000 W	22 000 W
Supply connections and terminals	L1, L2, L3, N, PE Cu 2.5 – 10 mm² Tightening torque: 1.5 - 1.8 Nm		L1, L2, L3, N, PE Cu 2.5 – 10 mm² Tightening torque PE: 1.5 - 1.8 Nm L + N: 2.5 - 3.0 Nm	

Design and Mechanics	EVH161-HC000 EVH163-HC000	EVH321-HC000 EVH323-HC000	EVH161-HCR00 EVH163-HCR00	EVH321-HCR00 EVH323-HCR00
Material	Polycarbonate			
Color	Frame: RAL7021 dark grey Cover: Silver			
Installation box	Screw fixing		Mechanical hatch lock	
Weight	approx. 7 kg			
Ingress Protection	IP54			
Impact Resistance	IK10			
Operating temperature	-40 °C ... +50 °C			
Mounting	Wall / Ground			

User Interface	EVH161-HC000 EVH163-HC000	EVH321-HC000 EVH323-HC000	EVH161-HCR00 EVH163-HCR00	EVH321-HCR00 EVH323-HCR00
Connection to vehicle	Fixed cable, length 5m			
Charging status indication	4-color LED: Green = Ready / Blue = Charging / Red = Error / Yellow = Internal maintenance			
Use access	Free access Mobile application			

Safety Features	EVH161-HC000 EVH163-HC000	EVH321-HC000 EVH323-HC000	EVH161-HCR00 EVH163-HCR00	EVH321-HCR00 EVH323-HCR00
RCD	RDC-DD Type A 30mA must be installed in distribution board		RDC-DD RCBO integrated	
MCB	Max. 16A must be installed in distribution board	Max. 32A must be installed in distribution board		

Control and Communication	EVH161-HC000 EVH163-HC000	EVH321-HC000 EVH323-HC000	EVH161-HCR00 EVH163-HCR00	EVH321-HCR00 EVH323-HCR00
Operation mode	Standalone			
Wireless	Bluetooth			
Charging control system	“Simplified control pilot” functionality, specified in EN IEC 61851-1:2019, Annex A.2.3 is not supported. ZEReady 1.2b and EVReady 1.4b are not supported.			

6. Code key

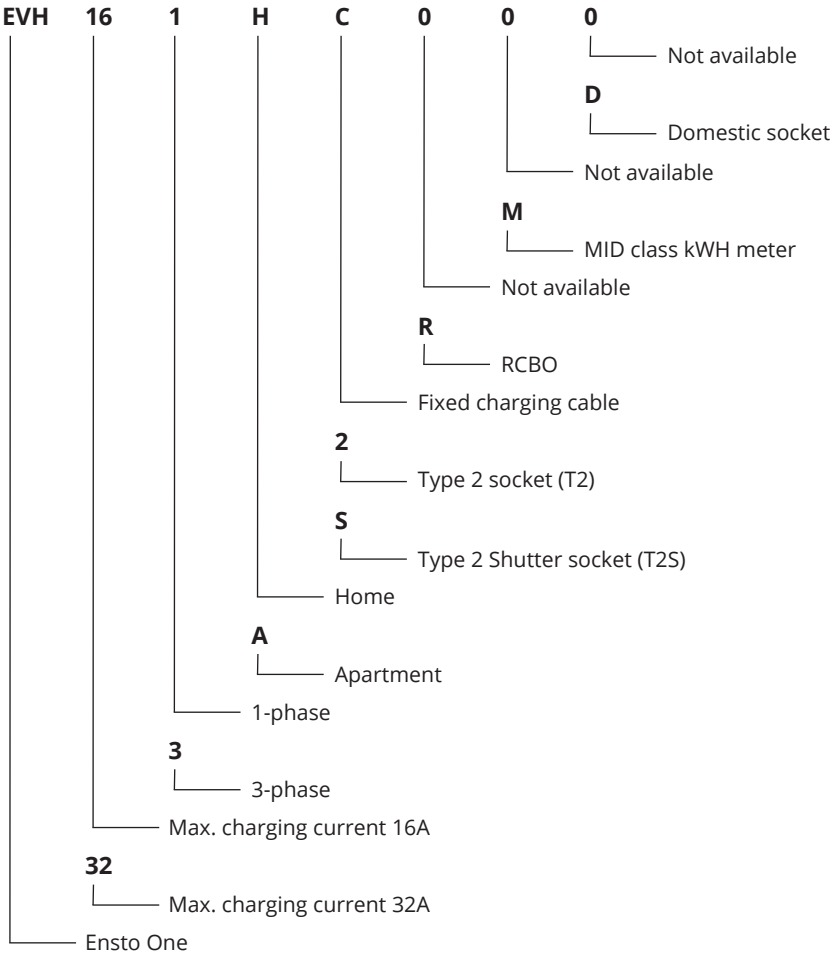
EVH
16
1
H
C
0
0
0
Not available
D
Domestic socket
Not available
M
MID class kWH meter
Not available
R
RCBO
Fixed charging cable
2
Type 2 socket (T2)
S
Type 2 Shutter socket (T2S)
Home
A
Apartment
1-phase
3
3-phase
Max. charging current 16A
32
Max. charging current 32A
Ensto One

7. Installation / Commissioning checklist

Introduction

Check the mechanical and electrical installation according this checklist in order to make sure that the charger is properly installed.

Checking the Installation



Go through the visual, mechanical and electrical installation when the charger is unpowered.

CATEGORY	X	ITEM
Overall look		You have received the ordered material.
		You do not see any scratches or damages.
Mechanical installation		The charger is fixed properly on installation site.
Electrical installation		Charger's power supply capacity meets electrical planning (cable size, protective devices...). Review the local electrical design plan.
		The the PE-cable screw is tight.
		The power supply conductors (L1, L2, L3, N and PE) are properly connected.
		The insulation of the power supply cable and conductors (L1, L2, L3, N and PE) is intact.
		The voltage between PE and N is less than 10 V.
		The PE conductor resistance is less than 3 Ω.
Operational check		All the LED states / color (green, blue, red) are functioning. • Use a car simulator. • Create fail and charge. • Red at bootup, green at idle and blue while charging.
		Test the functionality of the protective device.
Ready for use		Correct software is in use.

8. EVH161-HC000 / EVH321-HC000 internal circuit example

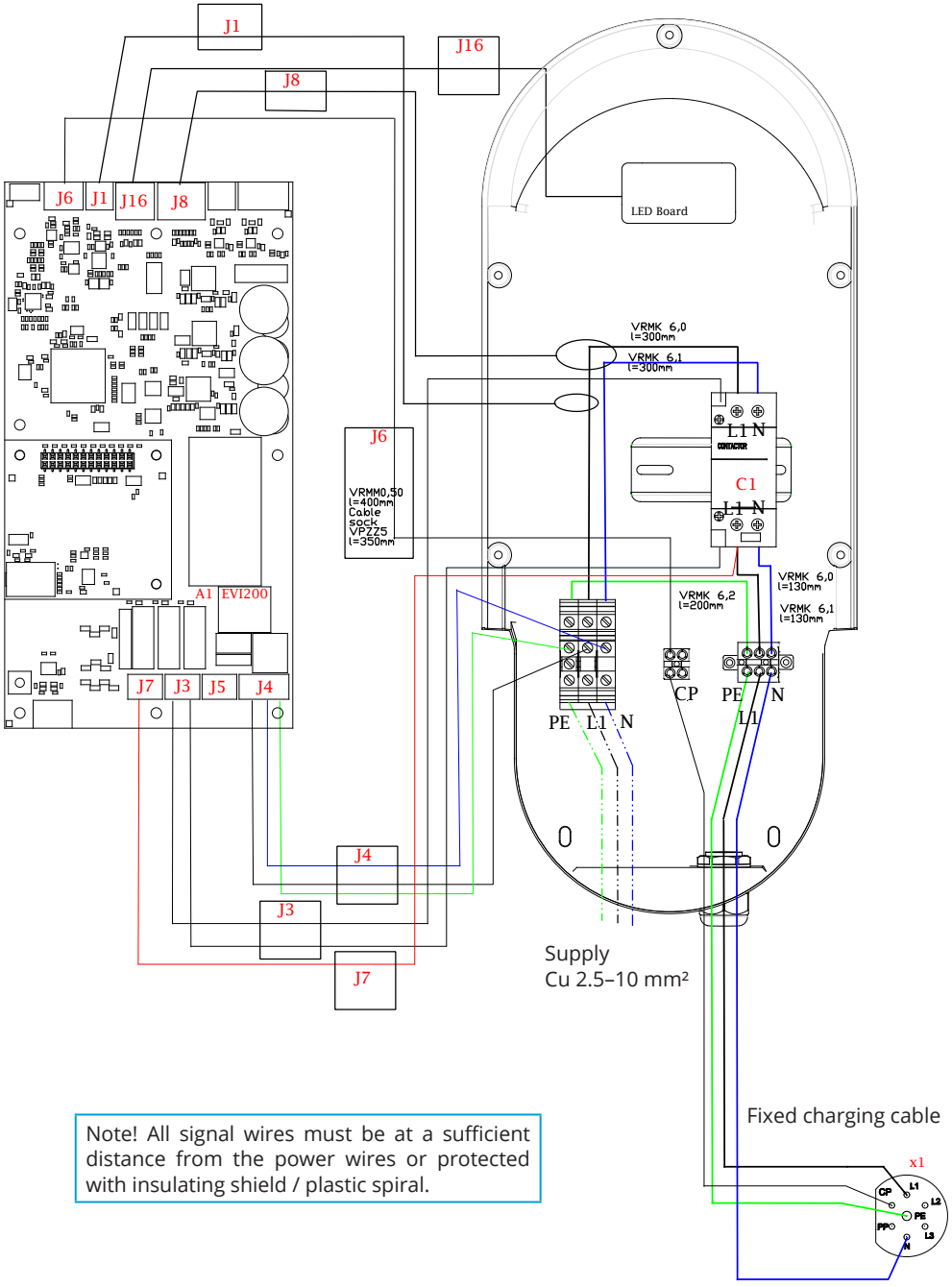

Note! All signal wires must be at a sufficient distance from the power wires or protected with insulating shield / plastic spiral.

9. EVH163-HC000 / EVH323-HC000 internal circuit example

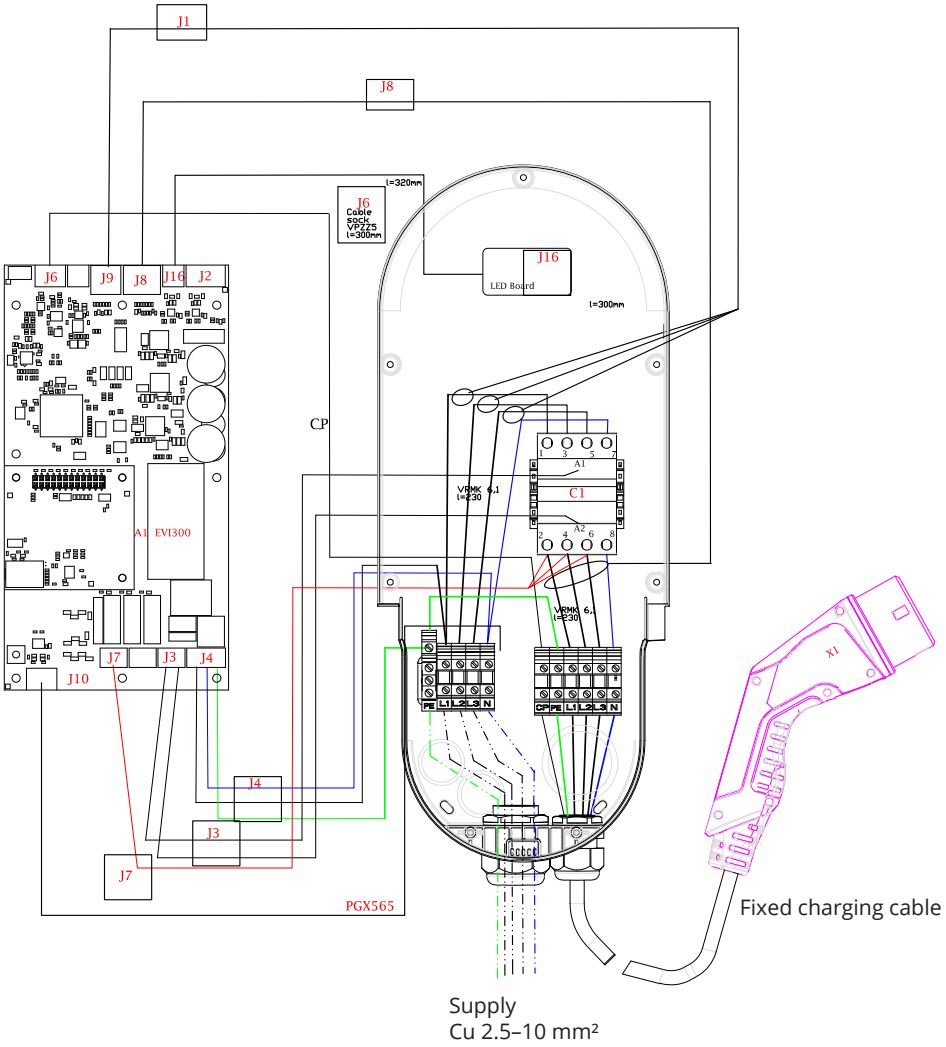

Note! All signal wires must be at a sufficient distance from the power wires or protected with insulating shield / plastic spiral.

10. EVH161-HCR00 / EVH321-HCR00 internal circuit example

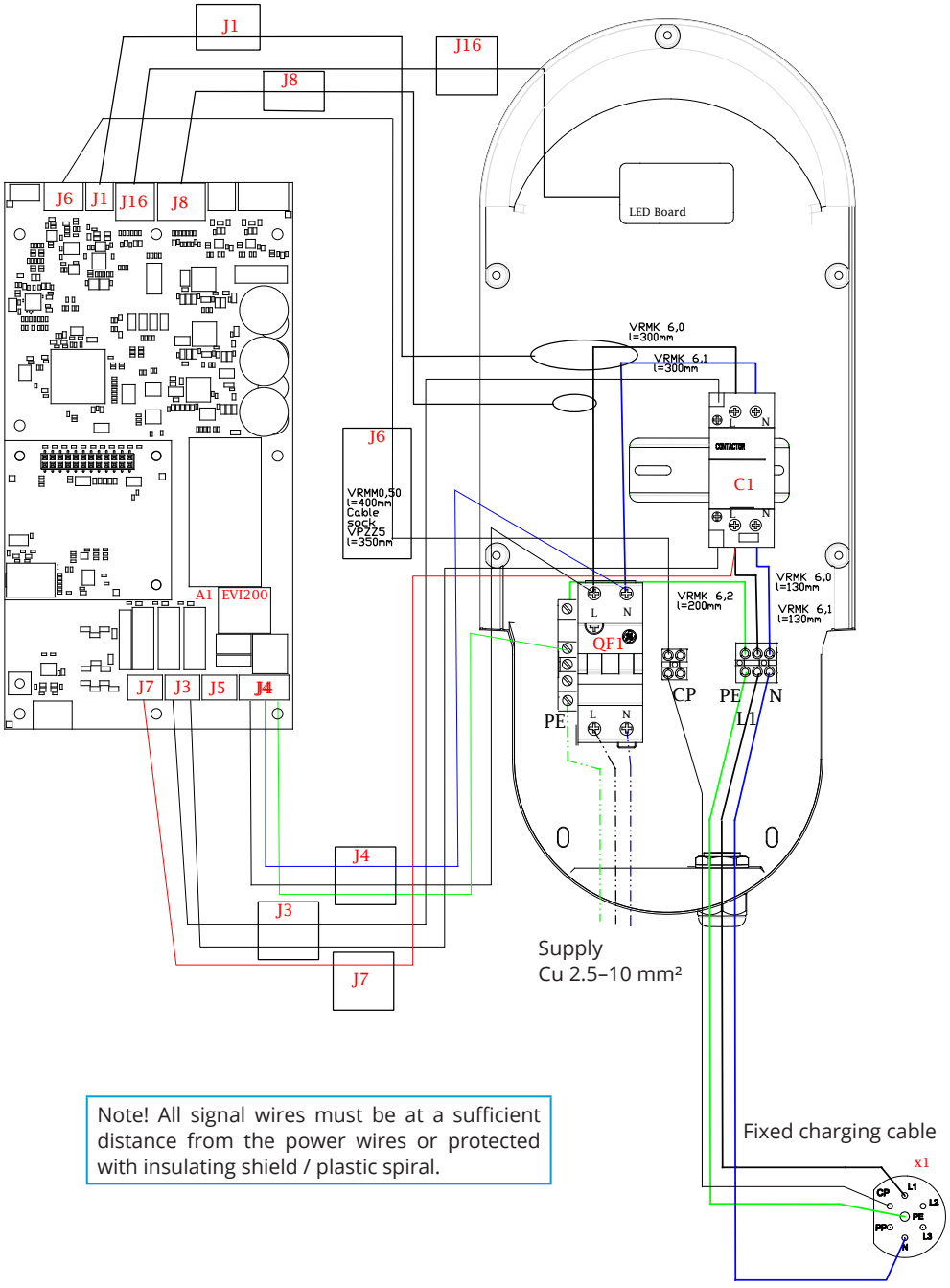

Note! All signal wires must be at a sufficient distance from the power wires or protected with insulating shield / plastic spiral.

11. EVH163-HCR00 / EVH323-HCR00 internal circuit example

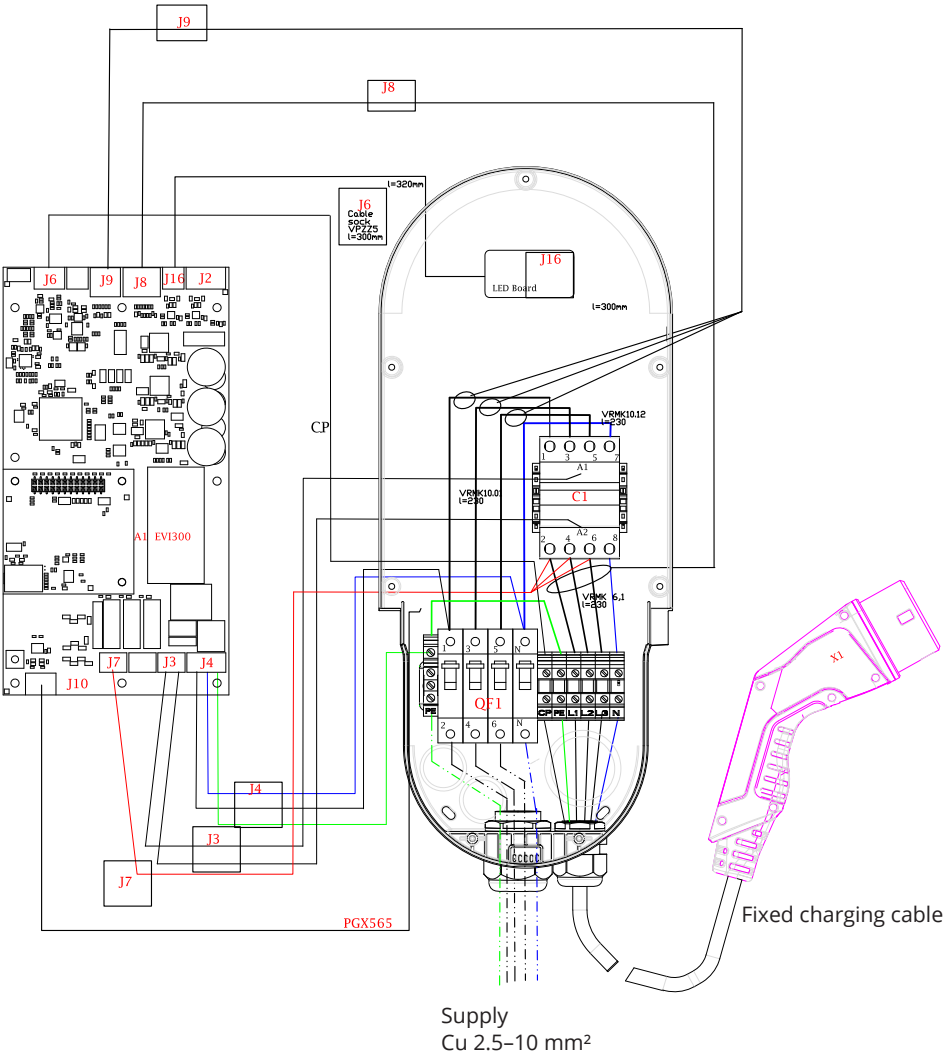

Note! All signal wires must be at a sufficient distance from the power wires or protected with insulating shield / plastic spiral.

12. Dimension drawing

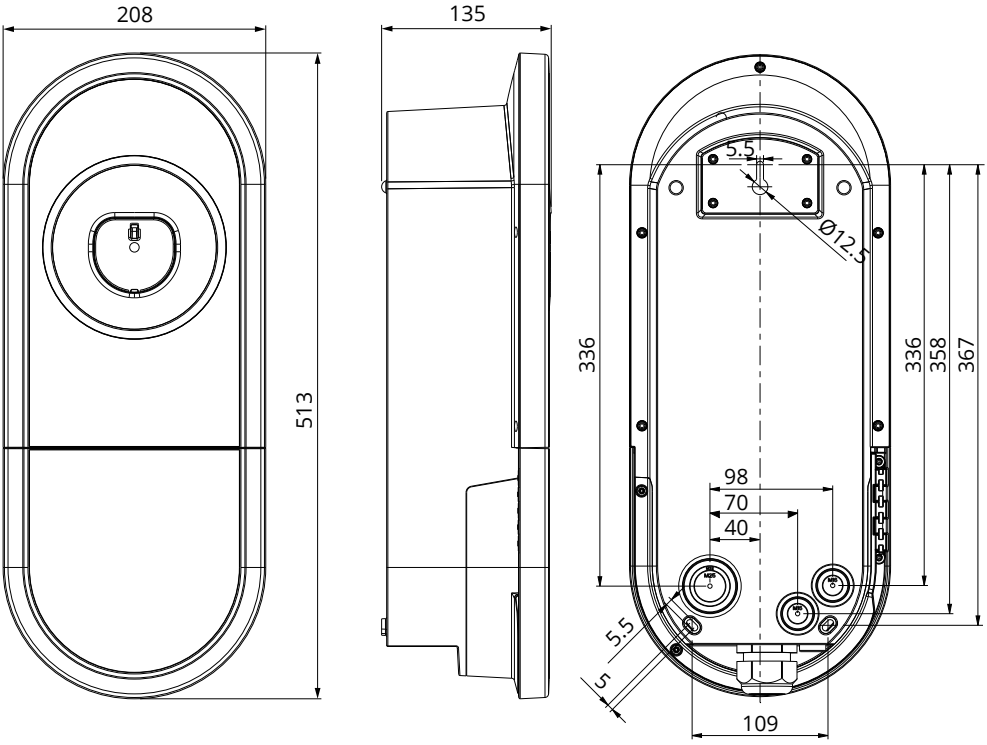

13. Troubleshooting

Charging station is off, no lights on

Issue	Corrective action
Mains voltage does not exist in supply connectors (L1, L2, L3).	Ensure proper power supply.
The circuit breaker QF1 is off (EVH...-HCR00).	Turn the QF1 on.

14. Ensto Charger Control Application

- The charger is ready to use after the installation is completed.
- You can control the charger and change settings with the Ensto Charger Control Application.
- In this chapter is described the installer menu in the application.
- For additional instructions please see the User Guide for the Ensto One Home charger.

14.1. Installer menu in the Ensto Charger Control Application

WARNING

Danger of electric shock! Risk of fire!

- ***Settings described in this chapter must only be done by an electrically skilled person.***

Open the Installer menu

- Open the Ensto Charger Control on your mobile device.
- Go to "***Support***".
- Press the letter ***E*** on the ***ENSTO*** logo for a long time.

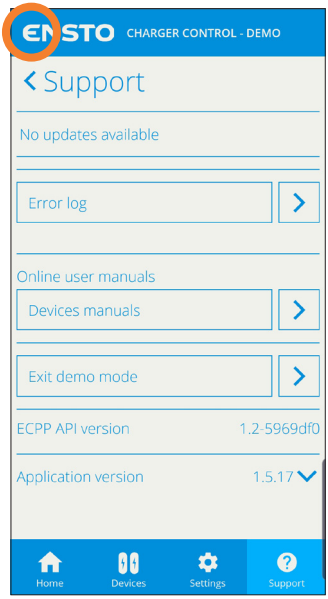

14.1.1. Self test

- The charger performs a self test automatically at start-up.
- During the self-test, several components and their proper function is tested.
- The LED indicator is stable green during the self test.
- The extent and duration of the self test depend on the charger model.
- If a critical fault is detected during the self test, the charger will go to error state. You can see the error code in the error log.

14.1.2. Update device firmware

This menu is visible if a firmware update is available.
We recommend that you update the firmware to ensure that the charger works properly.

14.1.3. Maximum charging current



The setting of the maximum charging current must comply with the system dimensioning.

If the electric system dimensioning on the installation site requires a lower charging current than the charger's nominal value, you can change the setting in this menu.

14.1.4. Connected phases

Select the phase the charger is connected to.

14.1.5. Phase rotation (only 3-phase chargers)

Selection of phase rotation is only informative and does not affect the charger operation.

14.1.6. Eathing System

The default setting for power supply is TN network. If you connect the charger to an IT network, you have to change settings for the charger accordingly.

14.1.7. Overcurrent limit

- Certain car models tend to take more charging current than set as the charger's maximum charging current.
- In case an overcurrent of 10% lasts longer than 3 minutes, it results an error state. If the overcurrent is 16% it results an error state immediately.
- You can prevent unnecessary error states by setting an overcurrent limit.
- If the charging current is lower than 10A, you can set the overcurrent limit up to 30%.



ensto.com

ENSTO

Ensto Chago Oy
Ensio Miettisen katu 2, P.O. Box 77
FIN-06101 Porvoo, Finland
Tel. +358 204 76 21