ENSTO

PEM-SJKV0C-SE
2021-12-09
Revision D

SJKV0C-SE

U_o/U (U_m) kV	mm²	mm²
0,6/1 (1,2) kV	6-35	6-35

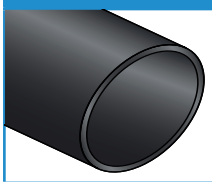	CPEEPL51-16 500 mm	1		PEM-SJKV0C-SE PEM1992 PEM2034	1 1 1
	CPEEPL16-4 110 mm	5			
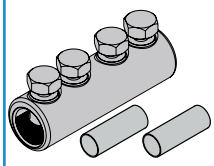	SLJ0.47	5			
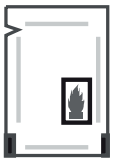	CT149	1			
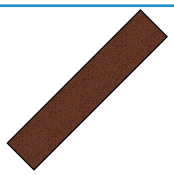	PEE64/350	1			

1.

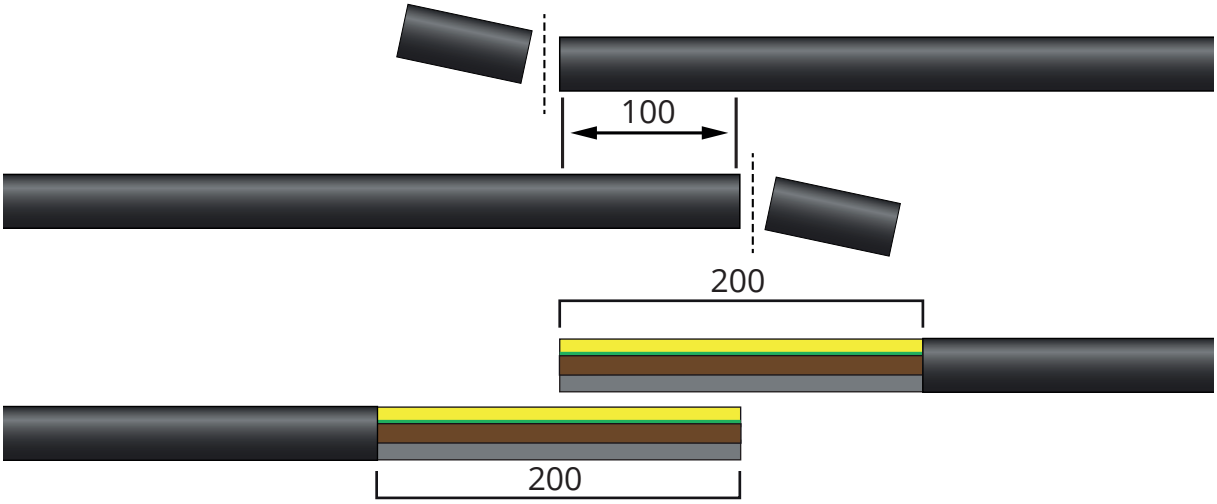

2.

CPEEPL51-16

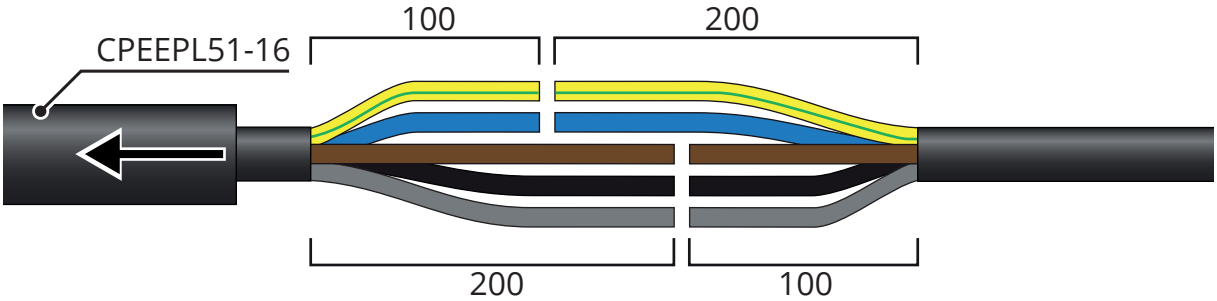

3.

CPEEPL16-4

PEE64/350

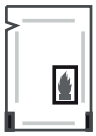

CT149

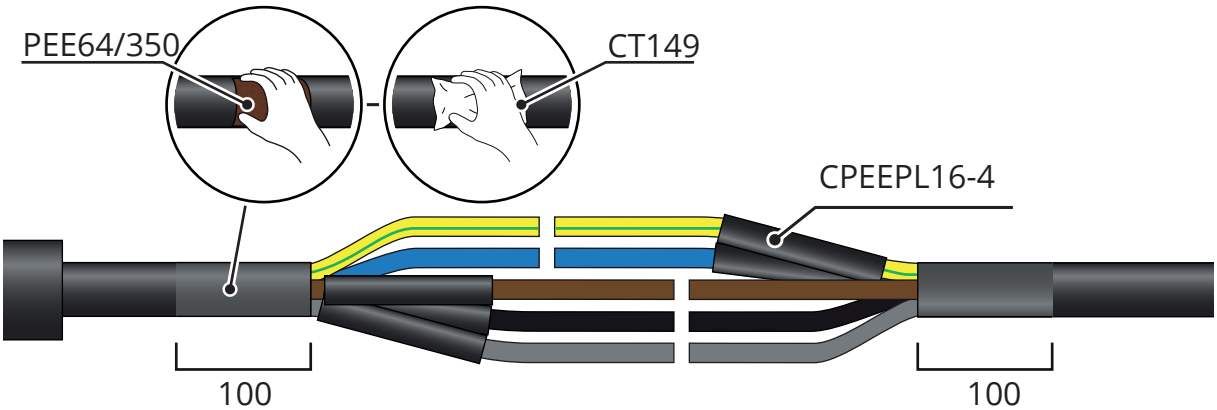

4.

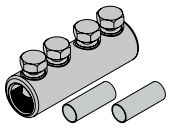

SLJ0.47

PEM1992

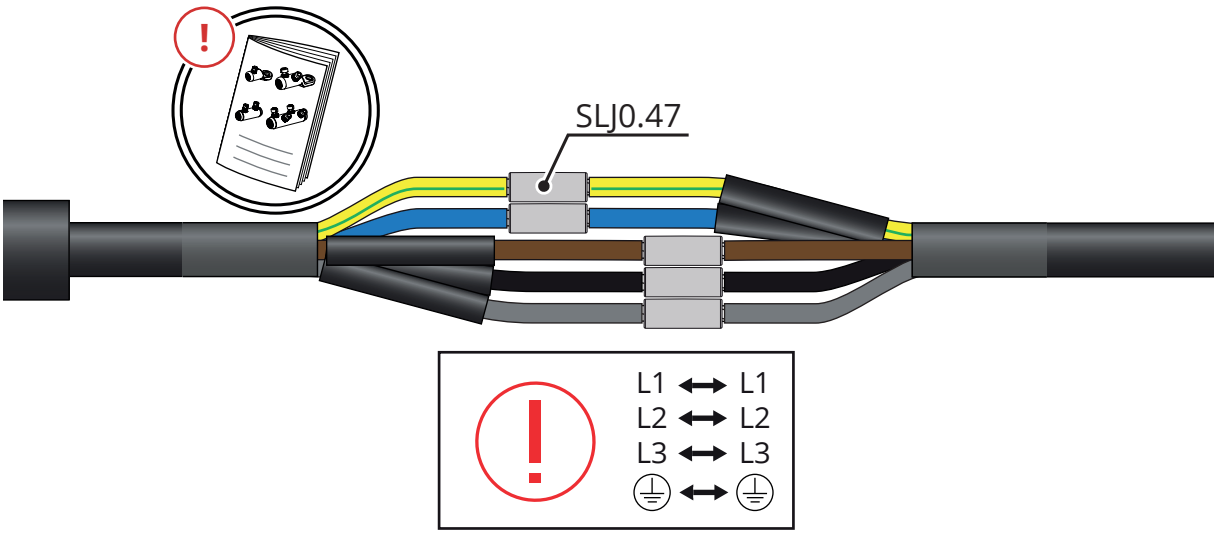

5.

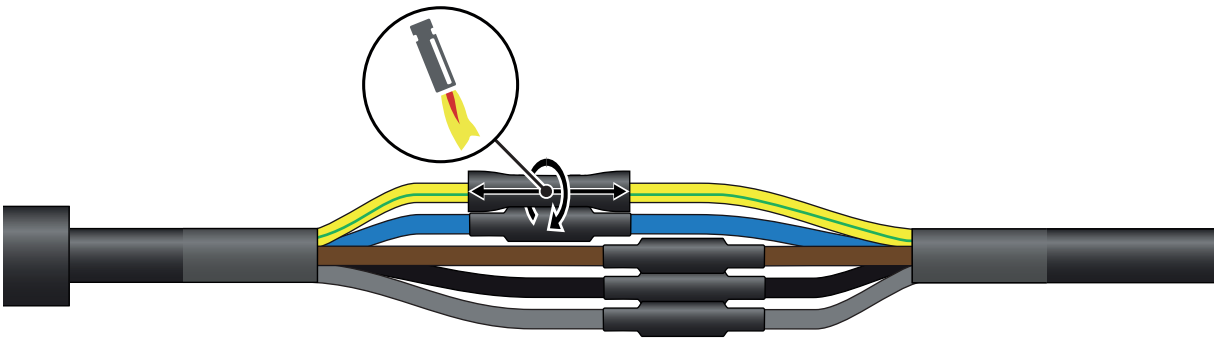

6.

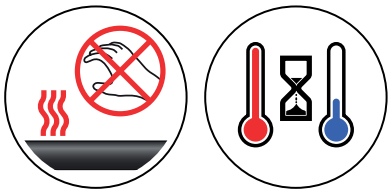

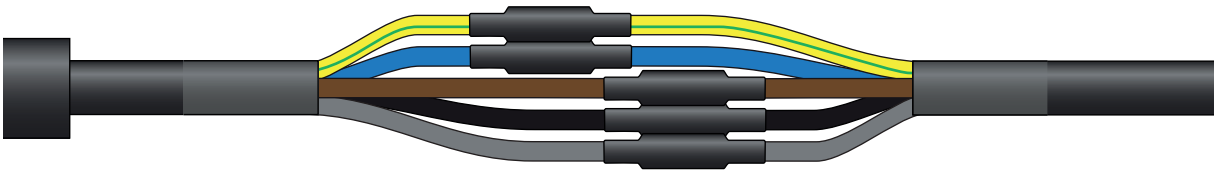

7.

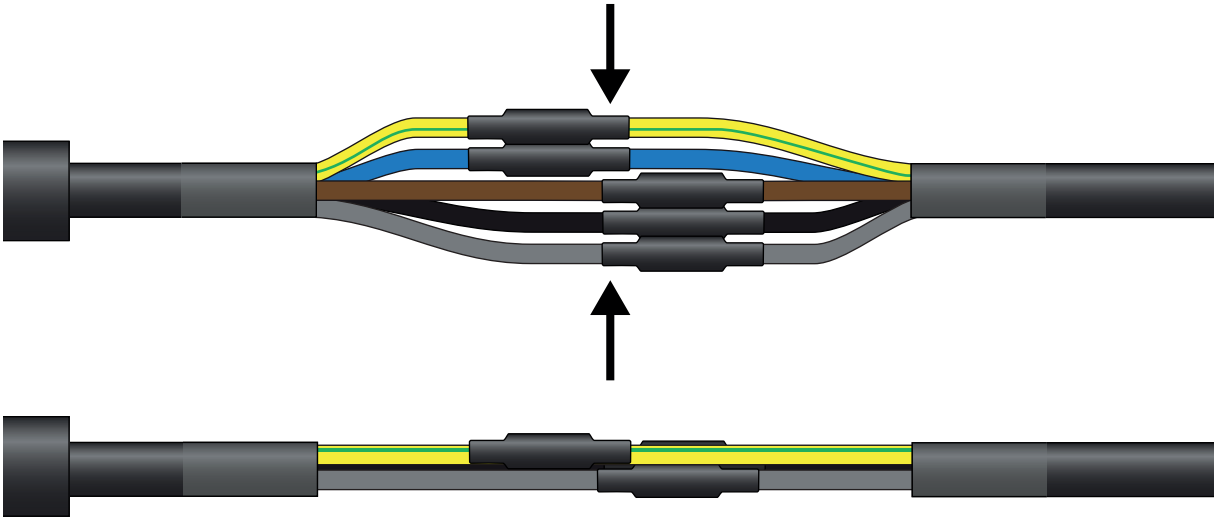

8.

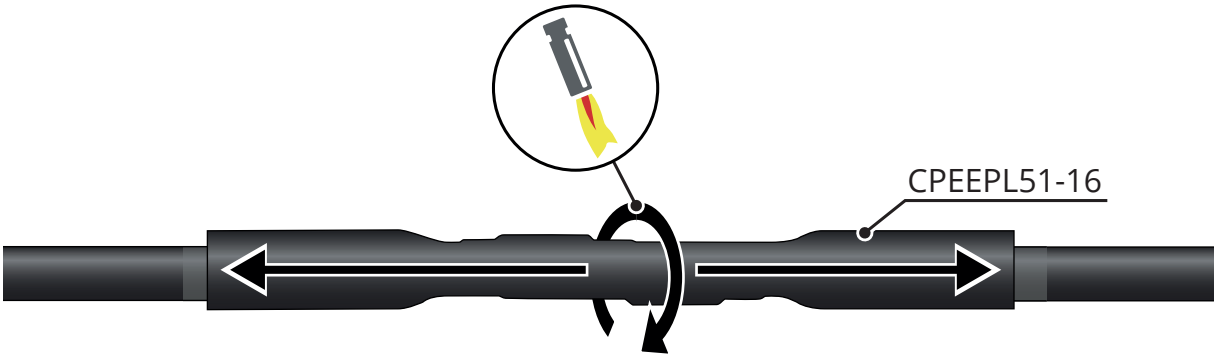
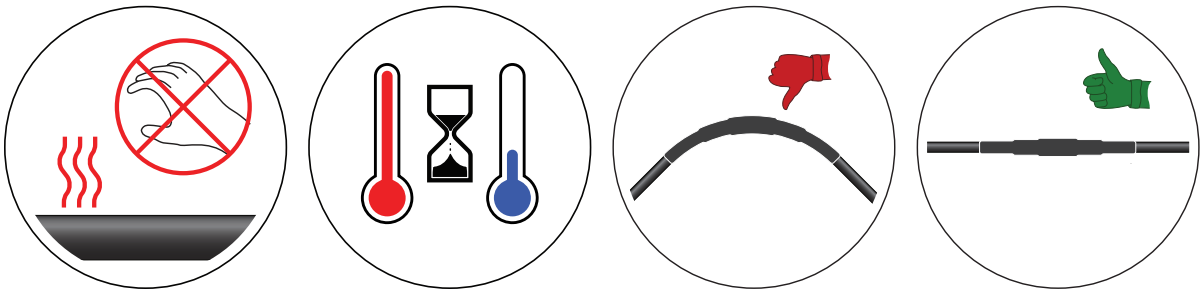
9.