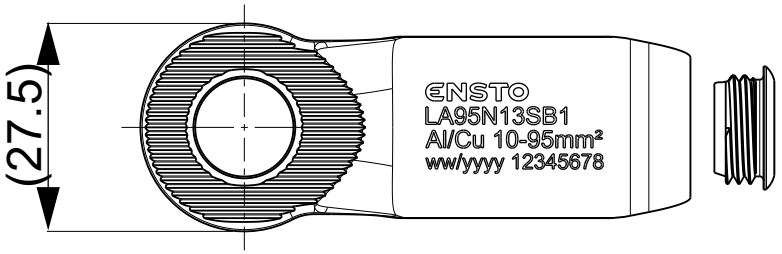
(27.5)
ENSTO
LA95N13SB1
Al/Cu 10-95mm²
ww/yyyy 12345678

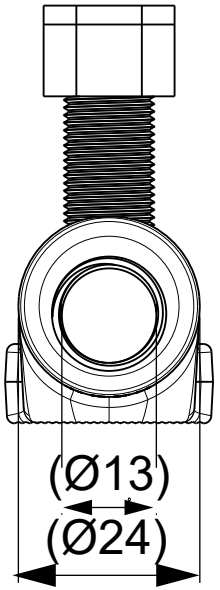
(Ø13)
(Ø24)

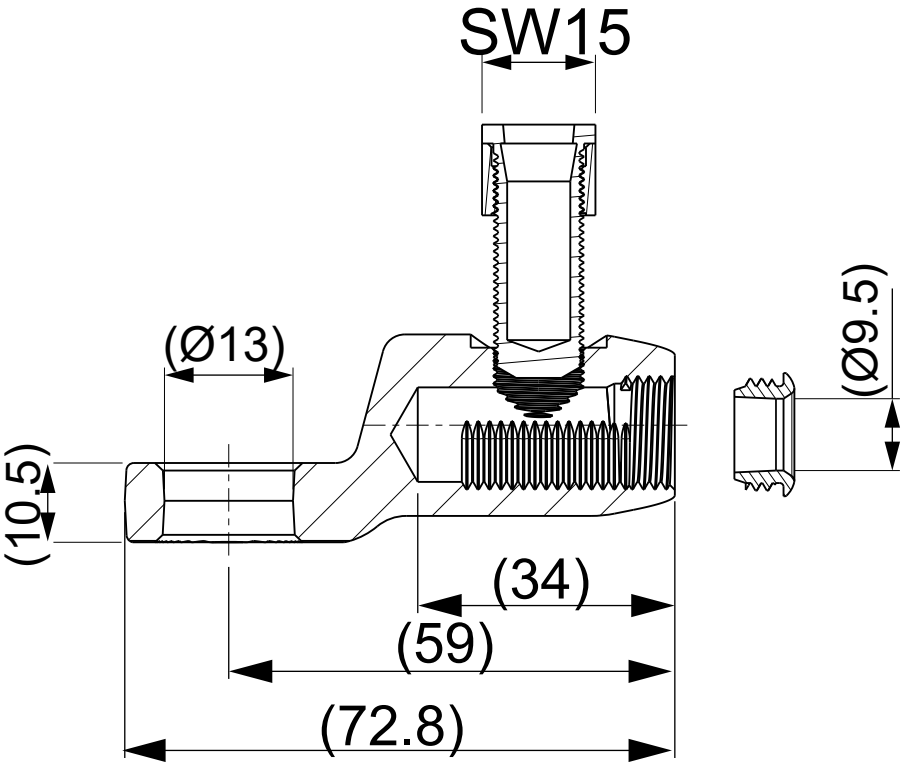
SW15
(Ø13)
(Ø9.5)
(10.5)
(34)
(59)
(72.8)